RENEW

SKU_YNM_PT13D_X1

FOR FLAT ROOF & GROUND MOUNTING

FAST TUB 13°

25 YEARS WARRANTY ★★★★★

Our Fast Tub is designed to accommodate almost any size and type of panel in both portrait and landscape orientations. Ideal for flat roof and ground-mounted solar panels, Fast Tubs offer exceptional speed and efficiency.

The new tubs feature a unique, patent-pending rail clamp that ensures rapid installation. Thanks to this innovative clamp design, alignment is effortless, allowing installation at nearly three times the speed of our previous models. No extra fixing or fitting is required, and this new system is fully compatible with the existing Renew Rail system.

This significant improvement reduces labor costs, boosts productivity, and ultimately enhances your profitability.

KEY TECHNICAL FEATURES:

- **Tub-and-Rail Architecture:** A hybrid design that combines the stability of aerodynamic tubs with the structural reinforcement of adjustable rails.
- **Variable Wind-Load Reinforcement:** Specifically designed to allow the integration of extra tubs in high-load areas ensuring structural integrity where traditional systems fail as they're unable to increase the ballast adequately
- **Monolithic Structural Bonding:** Arrays can be mechanically linked to form a single, rigid structure. This creates a "raft effect," significantly reducing the total ballast required by distributing loads across the entire footprint.
- **Universal Compatibility:** By adjusting the rail configuration, the system accommodates almost any panel dimension in both Landscape and Portrait orientations.

*25 Year warranty is offered under exceptional circumstances,which include but are not limited to extensive damage requiring significant repair or replacement, a surcharge of five percent (5%) of the current retail value of the product may be applied.

DESIGNED BY INSTALLERS FOR INSTALLERS

01273 033 520
www.renew-store.co.uk

RENEW

FAST TUB 13°

SMART HIGH-WIND DESIGN.

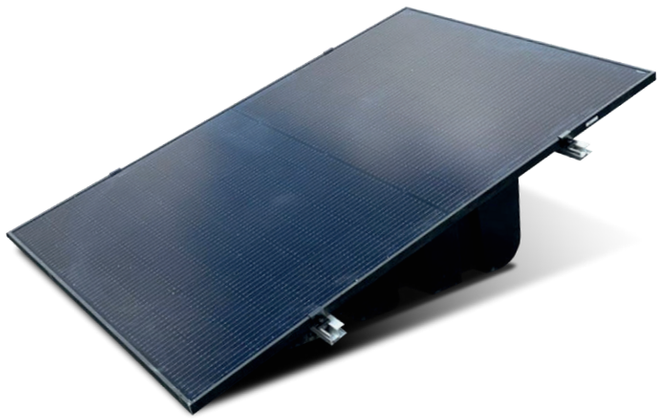

PERFORMANCE BENEFITS:

Less Weight. More Protection.

Monolithic array connections reduce ballast requirements, easing roof load and protecting membranes.

Engineered for Your Site.

Custom-designed systems with certified wind-load calculations for full code compliance.

Built for the Elements.

Corrosion-resistant and UV-stabilised to perform in extreme weather.

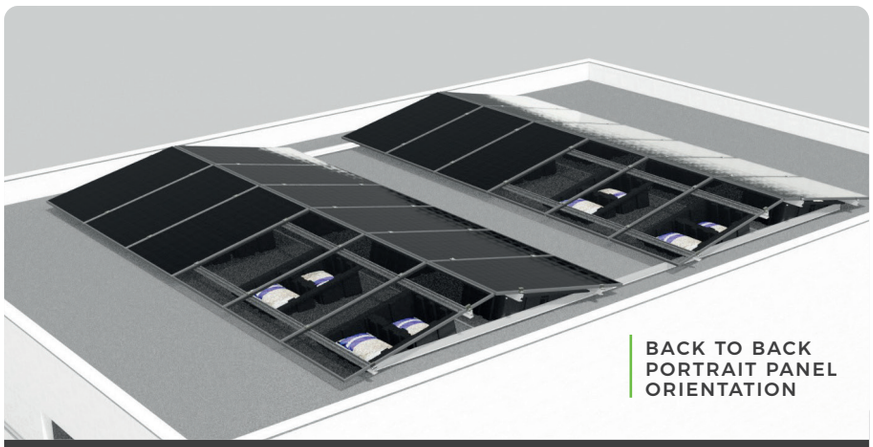

HOW IT WORKS.

- A ballasted mounting solution designed for installing solar panels in both landscape and portrait orientation on flat roofs or ground installations.
- The system is secured using ballast such as gravel, paving slabs, bricks, rocks, or similar materials, eliminating the need for roof penetration.
- Provides a fixed 13° tilt angle and can be installed on flat roofs with a pitch of up to 5°.
- Technical Specification- Allowable tightening torque for A2-70 stainless steel M8 bolts: 11 ± 1 Nm.
- For portrait installations using parallel rails, mounting point locations must align with the panel manufacturer's specification data sheet.

R-LOCK ALLOWS

SUPER FAST ASSEMBLY

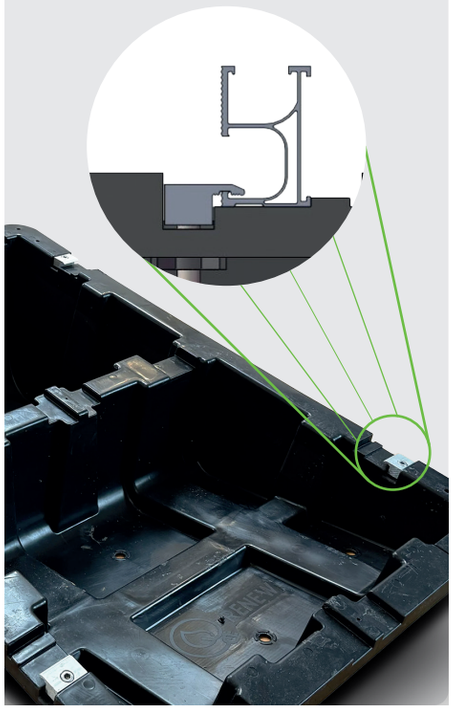

DESIGNED BY INSTALLERS FOR INSTALLERS

01273 033 520
www.renew-store.co.uk

RENEW

SKU_YNM_PT13D_X1

THE DETAILS

Mounting Type:
Flat Roof (Ballasted)
or Ground Mount

Module Orientation:
Landscape or Portrait

Material:
High-density Polyethylene (HDPE)
/ Aluminum / Stainless Steel

Roof Pitch;
Suitable for pitches up to 5˚
(higher with mechanical fixings)

Wind Load:
Custom-calculated per project by
structural engineers

Panel Compatibility:
Universal (Adjustable rail system)

Fixing Method:
Ballast-supported or mechanical
attachment

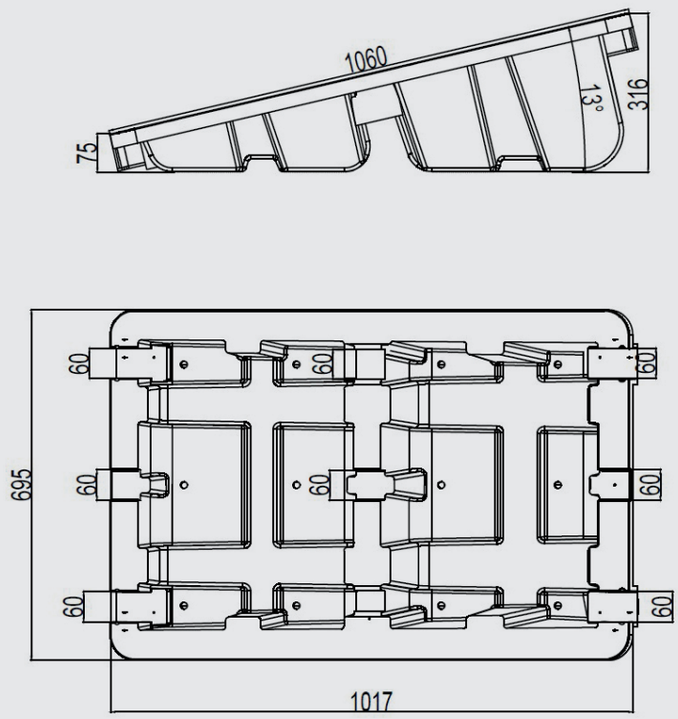

PORTRAIT PANEL
INSTALLTION

BUILT FOR EVERY LAYOUT

Landscape Rail Configuration

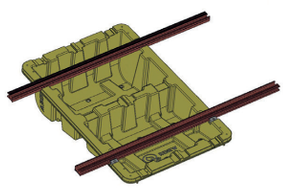

Oversized Portrait Panels

Can be installed using this Rail Configuration

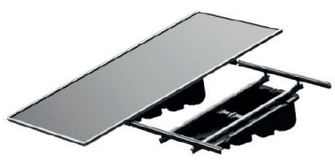

SIMPLER FASTER SMARTER

DESIGNED BY INSTALLERS FOR INSTALLERS

01273 033 520

www.renew-store.co.uk

RENEW

MOUNTING RAILS

Made from Aluminum and used in all our applications. Installed with pitched IBR or corrugated roofs in conjunction with L-Bracket spaced at 1,5m and on pitched tiled roofs at 1,2m spacing (dependent on truss spacing). The rails are used on tilted and ground mounted installations.

3.3M BLACK
SKU_FS_F_MR3300_BX1

3.6M BLACK
SKU_FS_EC35V1_BX1

3.3M SILVER
SKU_FS_F_MR3300_SX1

3.6M SILVER
SKU_FS_F_MR3600_SX1

4.2M SILVER
SKU_FS_F_MR4200_SX1

Fastensol

MID CLAMP

Designed to secure two adjacent solar panels to the mounting rails, placed between panels in a now. These mid clamps are adjustable, fitting solar panels with frame thicknesses ranging from 30 to 50mm.

30MM SILVER
SKU _FS_MC30_SX1

35MMSILVER
SKU _FS_MC35_SX1

V2 THE RENEW x FASTENSOL BLACK

Features a plastic spring mounted installation guide which helps hold the mid clamp in place when you're installing it into the rail.

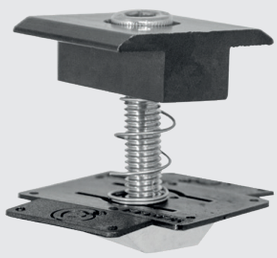

30MM BLACK
SKU_FS_MC30V2_BX1

END CLAMP

End clamps secure the solar panels to the mounting rails, and are used at the ends of the row of panels.

30MM SILVER
SKU_FS_EC30_SX1

35MMSILVER
SKU_FS_EC35_SX1

V2 THE RENEW x FASTENSOL BLACK

Features a plastic spring mounted installation guide which helps hold the mid clamp in place when you're installing it into the rail.

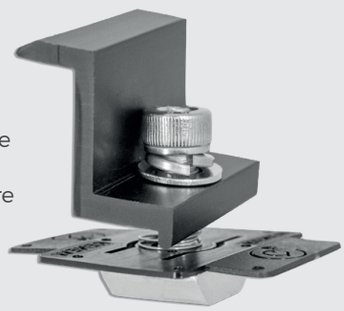

30MM BLACK
SKU_FS_EC30V2_X1

DESIGNED BY INSTALLERS FOR INSTALLERS

01273 033 520
www.renew-store.co.uk